DRIP PROOF & WATER PROOF CONTROLS

SERIES NS–W & NS–P

SAGHOMIYA

GENERAL DESCRIPTION

- Approved by various marine standards such as Bureau Veritas, Lloyd's Register, Det Norske Veritas · Germanischer Lloyd's, Nippon Kaiji Kyokai, ABS etc.
- Suitable for indoor or outdoor applications where water drips and dusts are apt to enter, such as marine refrigeration units or industrial plants.
- External wiring is made by cabtyre cable connection with cable glands.
  Standard gland size: ϕ20mm
  Semi standard gland size: ϕ15mm
- To order, specify catalog No. with "W" or "P".
  Example: Type SNS–C106XW Drip proof model
  Type SNS–C106XP Water proof model

Type SNS–W, FNS–W, ANS–W

Type SNS–P, FNS–P, ANS–P

● Type SNS–W/P — Drip proof and Water proof model of single function pressure controls.

TYPE NUMBER SELECTION (SPECIFICATIONS)

Automatic reset type

Unit: MPa (kgf/cm²)

Catalog No.		Range		Differential		Factory Setting		Max. Working Pressure	Contact Function	WL (kg)
		Min.	Max.	Min.	Max.	Off (On)	On (Off)			
SNS–C101X	W	−0.06 (−50cmHg)	0.1 (1)	0.015 (0.15)	0.05 (0.5)	0.025 (0.25)	0.05 (0.5)	0.3 (3)	Diagram 1	SNS–W: Approx. 1.1 SNS–P: Approx. 0.8
SNS–C102X	W, P	−0.02 (−20cmHg)	0.2 (2)	0.025 (0.25)	0.15 (1.5)			0.5 (5)		
SNS–C103X	W, P	−0.06 (−50cmHg)	0.3 (3)	0.035 (0.35)	0.2 (2)	0.05 (0.5)	0.15 (1.5)	1 (10)		
SNS–C104X	W, P	−0.06 (−50cmHg)	0.4 (4)	0.04 (0.4)		0.1 (1)	0.2 (2)	1.5 (15)		
SNS–C106X	W, P	−0.06 (−50cmHg)	0.6 (6)	0.06 (0.6)	0.4 (4)	0.2 (2)	0.3 (3)			
SNS–C110X	W, P	0.1 (1)	1 (10)	0.1 (1)	0.3 (3)	0.4 (4)	0.6 (6)			
SNS–C130X	W, P	0.5 (5)	3 (30)	0.3 (3)	1 (10)	2 (20)	2.5 (25)	3.3 (33)		
SNS–C135X	W, P	1 (10)	3.5 (35)	0.5 (5)	1.5 (15)	2.5 (25)	3 (30)	3.8 (38)		

Manual reset type

Unit: MPa (kgf/cm²)

Catalog No.		Range		Manual Reset	* Factory Setting		Max. Working Pressure	Contact Function	WL (kg)
		Min.	Max.		Off (On)	On (Off)			
SNS–C102XM2	W, P	−0.02(−20cmHg)	0.2 (2)	Automatic operation on pressure decrease and manual reset on pressure increase	0.025 (0.25)	Manual Reset	0.5 (5)	Diagram 2	SNS–W: Approx. 1.1 SNS–P: Approx. 0.8
SNS–C106XM2	W, P	−0.06(−50cmHg)	0.6 (6)		0.2 (2)		1.5 (15)		
SNS–C130XM2	W, P	0.5 (5)	3 (30)		2 (20)		3.3 (33)		

* Based on the 1–3 terminal connection.

ELECTRICAL RATINGS

Rated Current (A) \ Rated Voltage (V)		Power Factor (cos ϕ)	125/250V. AC
Non-Inductive Current		1	12
Inductive Current	Full Load	0.75	
	Inrush Current	—	72

Minimum contact capacity: 50mA

CONTACT FUNCTIONS

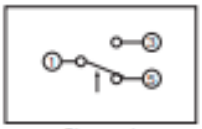

Diagram 1

Diagram 2

	Diagram 1 & 2
1	Common Terminal
3	Close on Pressure Increase
5	Close on Pressure Decrease

↑ : Operating direction on press. increase at High Press. Side
M2 ↑ : Operating direction on manual reset

DIMENSIONS

Type SNS–P, FNS–P, ANS–P

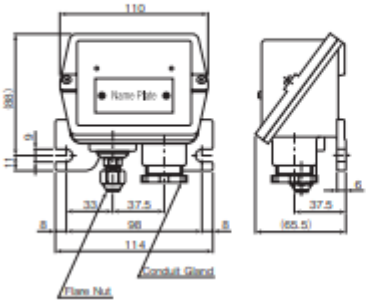

Type SNS–W, FNS–W, ANS–W

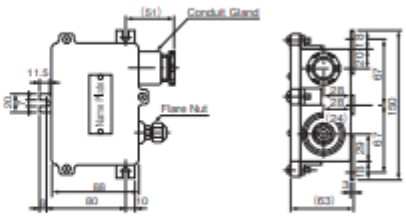

Unit: mm